SIEMENS

Technical Instructions
Document No. 7673
VKF1x.xxx
August 17, 2022

VKF1x Series

VKF1x.xxx Butterfly Valves

VKF1x.xxx

ISO 9001 and 14000 REGISTERED FIRM

EAC Conformity (Eurasian Conformity)

UKCA conformity mark (UK)

ISO 9001:2015
ISO 14001:2015
OHSAS 18001:2007

China RoHS
Hazardous substances table:
http://www.siemens.com/download?A6V10883536

Description

VKF1x butterfly valves control the flow of many common gases including air, natural gas, propane, butane, biogas, or FGR.

Features

- Available in swing thru or beveled disk versions
- Full port or reduced port mounting options
- 1-1/4” [DN32] through 8” [DN200] valves available
- Mounts between ANSI #125/#150 or ISO 7005-2 (PN10/PN16) flanges
- Accommodates flow in either direction
- Valve disk position indication
- Suitable for air, natural gas, propane, butane, or FGR
- Suitable for dry biogas within composition limits
- Maximum media temperature of 356°F [180°C]
- Includes coupling for 10mm D actuator shaft
- Includes bracket for SQM33, SQM40, and SQM45 actuators
- Valve actuator assemblies available (see Technical Instructions VA-3100)

Application

VKF1x butterfly valves control the flow of air, natural gas, propane, butane, biogas, or FGR. Valves are positioned using a rotary actuator.

CAUTION: Valves are not to be used as safety shutoff valves. Valves are designed for throttling service only.

Mounting notes

- Ensure that the relevant safety regulations are complied with
- Mount between flanges conforming to ANSI #125/#150 or ISO 7005-2 (PN10/PN16)
- Butterfly valve and actuator can be assembled on site
- No special tools or adjustment required
- The butterfly valve can accommodate flow in either direction (preferred flow direction according to arrow)
- Use flange gaskets that are suitable for the type of gas being used
- Valve opens in the clockwise direction when valve stem is pointing at the observer
- The VKF1x butterfly valves require no maintenance

Mounting flange notes

- When using the valve as a full port valve, any common flange type (butt-weld, slip-on, threaded, etc.) may be used.
- When using the valve as a reduced port valve, consideration should be given to the type of flanges being used. Butt-weld flanges will provide the largest overlap between the sealing surfaces on the valve body and the flanges.
  - **When using a 6” VKF1x.150 valve with 8” flanges, only butt-weld flanges may be used! In addition, 6” full-face gaskets with bolt holes must be used instead of 8” gaskets. The mounting bolts will not pass through the bolt holes in the gasket.**

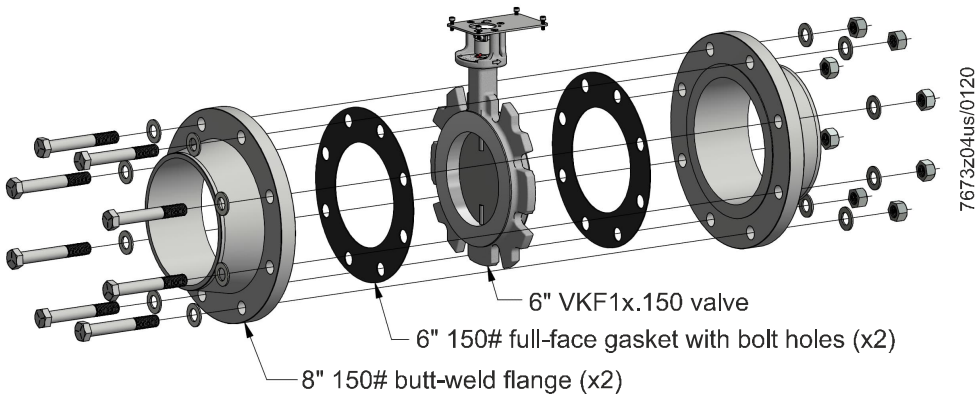

Figure 1. Mounting a 6” VKF1x.150 Valve in a Reduced Port Application

  - For all other sizes as a reduced port valve, threaded flanges or slip-on flanges may be used if the valve is properly centered between the flanges.

Part numbers

Table 1. VKF1x.xxx Part Numbers

Part Number	Valve Type	Port Diameter (inch [mm])	Max Operating Pressure	Temperature Range	ANSI #125/#150 Flange Compatibility[2]		Fully Closed Leakage (DP = 2"wc [0.5 kPa])
VKF10.032	Swing Thru	1.26 [32]	21.8 psig [1.5 bar]	5 to 356°F[1] [-15 to 180°C]	1-1/4"	1-1/2"	Less than 2.0% of full open flow
VKF10.040		1.57 [40]			1-1/2"	2"	
VKF10.050		1.97 [50]			2"	2-1/2"	
VKF10.065		2.56 [65]			2-1/2"	3"	
VKF10.080		3.15 [80]			3"	4"	
VKF10.100		3.94 [100]			4"	5"	
VKF10.125		4.92 [125]	14.5 psig [1 bar]		5"	6"	
VKF10.150		5.91 [150]			6"	8"	
VKF10.200		7.87 [200]			8"		
VKF11.032	Beveled Disk	1.26 [32]	21.8 psig [1.5 bar]	5 to 356°F[1] [-15 to 180°C]	1-1/4"	1-1/2"	Less than 0.5% of full open flow
VKF11.040		1.57 [40]			1-1/2"	2"	
VKF11.050		1.97 [50]			2"	2-1/2"	
VKF11.065		2.56 [65]			2-1/2"	3"	
VKF11.080		3.15 [80]			3"	4"	
VKF11.100		3.94 [100]			4"	5"	
VKF11.125		4.92 [125]	14.5 psig [1 bar]		5"	6"	
VKF11.150		5.91 [150]			6"	8"	
VKF11.200		7.87 [200]			8"		

[1] For gas service (natural gas, propane, etc.), the temperature range is 5 to 140°F [-15 to 60°C).
[2] See Mounting Flange Notes on page 2 for important information on flange compatibility.

Table 2. Fitment of Full Port and Reduced Port Valves

ANSI #125/#150 Flange Size	Swing Thru		Beveled Disk	
	Full Port	Reduced Port	Full Port	Reduced Port
1-1/4"	VKF10.032	X	VKF11.032	X
1-1/2"	VKF10.040	VKF10.032	VKF11.040	VKF11.032
2"	VKF10.050	VKF10.040	VKF11.050	VKF11.040
2-1/2"	VKF10.065	VKF10.050	VKF11.065	VKF11.050
3"	VKF10.080	VKF10.065	VKF11.080	VKF11.065
4"	VKF10.100	VKF10.080	VKF11.100	VKF11.080
5"	VKF10.125	VKF10.100	VKF11.125	VKF11.100
6"	VKF10.150	VKF10.125	VKF11.150	VKF11.125
8"	VKF10.200	VKF10.150[1]	VKF11.200	VKF11.150[1]

[1] 8” butt-weld flanges and 6” full-face gaskets with bolt holes must be used when fitting a 6” valve between two 8” flanges. See “Mounting flange notes” on page 2

Features **VKF10.xxx models**	The valve disk does not close against an end stop. After mounting the actuator, the position indicator and valve disk are both at 5°.
VKF11.xxx models	The valve disk closes against an end stop (approx. 5° position).

Ordering information	The butterfly valve and actuator are ordered as individual items. *Example:* 1 VKF10.100 butterfly valve 1 SQM40.255R11 actuator VAx assemblies include the actuator mounted to the VKF1x butterfly valve and are tested and shipped as a single component. See Technical Instructions VA-3100.

Accessories

SQM33

Actuator
(to be ordered separately)

Refer to data sheet N7813

SQM40.xx5xxx

Actuator
(to be ordered separately)

Refer to data sheet N7817

SQM45.295B9

Actuator
(to be ordered separately)

Refer to data sheet N7814

ASK33.1

SQM33, SQM40, SQM45 mounting bracket
(included with each VKF1x valve – does not need to be ordered separately!)

- Screws are provided to mount the actuator to the ASK33.1 bracket

SQM5x.xx5xxxx

Actuator
(to be ordered separately)

- Only SQM5 actuators with the 10mm D shaft may be used with the VKF1x butterfly valves!

Refer to data sheet N7815

ASK33.3

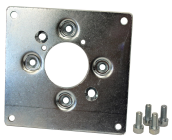

SQM5 mounting bracket
(to be ordered separately)

- Discard standard mounting bracket ASK33.1
- Screws are provided to mount the SQM5 actuator to the ASK33.3 bracket

Accessories, continued

SQN7x.xxxxx1

Actuator
(to be ordered separately)

Refer to data sheets N7802 and N7804

ASK33.5

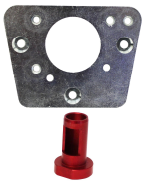

SQN7 mounting bracket and reducing sleeve
(to be ordered separately)

- Discard standard mounting bracket ASK33.1
- Screws are provided to mount the SQN7 actuator to the ASK33.5 bracket

VAx

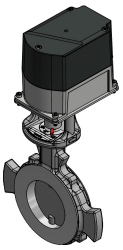

Valve actuator assemblies

- Includes the valve, coupling, bracket, and actuator and is shipped as a complete assembly

Refer to Technical Instructions VA-3100

VKF1X-MH

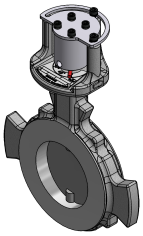

A manual kit that can be added to any VKF1 butterfly valve for use as a manual flow restrictor. The kit includes brackets and fasteners to lock the valve in any position.

Add “-MH” to the end of any VKF1 valve part number to have the valve shipped with the manual kit attached.

CA-VKF1X…

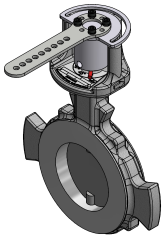

Three crank arm kits are available that can be added to any VKF1 butterfly valve. Holes or a slot in the crank arm allow users to connect a linkage (by others) to control valve position.

CA-VKF1X-1 – Crank arm kit with thick crank arm with holes
Add “-CA1” at the end of any VKF1 valve part number to have the valve shipped with crank arm kit CA-VKF1X-1 attached.

CA-VKF1X-2 – Crank arm kit with standard crank arm with holes
Add “-CA2” at the end of any VKF1 valve part number have the valve shipped with crank arm kit CA-VKF1X-2 attached.

CA-VKF1X-3 – Crank arm kit with standard crank arm with slot
Add “-CA3” at the end of any VKF1 valve part number to have the valve shipped with crank arm kit CA-VKF1X-3 attached.

Refer to Dimensions section for more details.

Specifications **Approvals**	Agency approvals/standards	**Applicable regulations:** Gas Appliances Regulation (EU)2016/426 Compliance with the regulations of the applied directives is verified by the adherence to the following standards/regulations: Safety and control devices for burners and appliances burning gaseous and/or liquid fuels – General requirements DIN EN 13611 Safety and control devices for gas burners and gas-burning appliances – General requirements ISO 23550	
Storage environment	EN 60721-3-1:1997 Climatic conditions Mechanical conditions Temperature range Humidity	 Class 1K3 Class 1M2 -4 to 140°F [-20 to 60°C] < 95% r.h.	
Operating environment	EN 60721-3-3:1995 + A2:1997 Climatic conditions Mechanical conditions Temperature range Humidity	 Class 3K5 Class 3M2 5 to 356°F [-15 to 180°C] (air and flue gas) 5 to 140°F [-15 to 60°C] (gas) < 95% r.h.	
Transport environment	EN 60721-3-2:1997 Climatic conditions Mechanical conditions Temperature range Humidity	 Class 2K2 Class 2M2 -4 to 140°F [-20 to 60°C] < 95% r.h.	
Permissible mounting positions	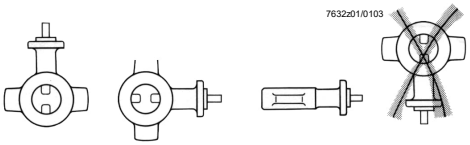		
Operating pressure	• Sizes up to and including 4” [DN100] • Sizes 5” [DN125] to 8”[DN200]	Maximum Pressure Maximum Pressure	21.8 psig [1.5 bar] 14.5 psig [1 bar]
Types of gases	• Air • Natural gas • Propane • Butane • Dry biogas – maximum concentration 1% H_2S, 1% NH_3 • FGR – see temperature limits		

Specifications, continued

Leakage rate	For VKF10/VKF11 – fully closed	See Table 5
Rotation angle	Closed position	5°
	Open position	85°
	Operating stroke	80°
	Valve stem rotates clockwise to open the valve – viewed with shaft pointed at observer	
	Torque	For low operating pressures (up to 4.4 psig), actuators with up to 27 in-lb can be used. For high operating pressures, the use of actuators with 90 in-lb or more is recommended.
Physical characteristics	Body materials:	
	• Valve body	GGG40.3 Cast iron with nodular graphite according to EN 1563
	• Shaft and valve disk	Stainless steel
	• Shaft seal	Double O-rings
	• Bearings	High-temp plastic
	Weight	Refer to *Dimensions*

CAUTION:
Condensation, formation of ice, and accumulation of water inside the valve are not permitted.
Failure to observe this information poses a risk of damaging the safety functions.

Flow Data

Full open flow through the valve body is tabulated below at common differential pressures. The air flow values can be converted to other gas flows using the multipliers below. Cv values can be used to calculate any operating condition (see page 11). Swing thru and beveled disk valves have the same fully open flow.

Multiplier to convert air flow (SCFH) to: Natural Gas (S.G. = 0.64) – **1.25** Propane (S.G. = 1.52) – **0.81** Butane (S.G. = 2.00) – **0.70** Digester Gas (S.G. = 0.86) – **1.07**

Natural gas flow (S.G. = 0.64) is also tabulated below for convenience.

For both tables, flow is calculated with an inlet pressure of 10” WC and a media temperature of 70°F.

Table 3. Air Flow in SCFH at Fully Open Position (85°)

Part Number	Port Diameter inch [mm]	Cv	Differential Pressure (in WC) - Air								
			0.5	1	1.5	2	3	4	5	6	8
VKF1x.032	1.26 [32]	39	1214	1716	2101	2425	2968	3426	3828	4190	4833
VKF1x.040	1.57 [40]	98	3029	4282	5243	6052	7408	8549	9552	10457	12060
VKF1x.050	1.97 [50]	176	5406	7642	9357	10802	13221	15257	17048	18664	21525
VKF1x.065	2.56 [65]	292	8996	12719	15573	17976	22003	25392	28372	31061	35823
VKF1x.080	3.15 [80]	448	13790	19496	23870	27555	33727	38921	43489	47611	54910
VKF1x.100	3.94 [100]	919	28289	39994	48968	56527	69189	79845	89216	97672	112646
VKF1x.125	4.92 [125]	1311	40339	57031	69827	80605	98662	113856	127219	139277	160629
VKF1x.150	5.91 [150]	1992	61310	86679	106128	122509	149953	173046	193355	211682	244135
VKF1x.200	7.87 [200]	2735	84193	119031	145739	168235	205921	237634	265523	290690	335255

Table 4. Natural Gas Flow in SCFH at Fully Open Position (85°)

Part Number	Port Diameter inch [mm]	Cv	Differential Pressure (in WC) - Natural Gas								
			0.5	1	1.5	2	3	4	5	6	8
VKF1x.032	1.26 [32]	39	1517	2145	2626	3031	3711	4282	4784	5238	6041
VKF1x.040	1.57 [40]	98	3786	5353	6554	7565	9260	10686	11940	13072	15076
VKF1x.050	1.97 [50]	176	6757	9553	11697	13502	16527	19072	21310	23330	26907
VKF1x.065	2.56 [65]	292	11245	15898	19466	22470	27504	31740	35465	38826	44779
VKF1x.080	3.15 [80]	448	17237	24370	29838	34443	42159	48651	54361	59514	68638
VKF1x.100	3.94 [100]	919	35361	49993	61210	70658	86487	99806	111519	122090	140807
VKF1x.125	4.92 [125]	1311	50424	71289	87284	100757	123327	142321	159023	174096	200787
VKF1x.150	5.91 [150]	1992	76637	108349	132660	153137	187441	216308	241694	264603	305168
VKF1x.200	7.87 [200]	2735	105241	148789	182174	210293	257401	297042	331903	363363	419069

Flow Data (continued)

Full closed flow (leak by) through the valve body is tabulated below at common differential pressures. The air flow values can be converted to other gas flows using the multipliers below. Cv values can be used to calculate any operating condition (see page 11). Beveled disk valves have a much lower leakage rate at the full closed position.

Multiplier to convert air flow (SCFH) to: Natural Gas (S.G. = 0.64) – **1.25** Propane (S.G. = 1.52) – **0.81**
Butane (S.G. = 2.00) – **0.70** Digester Gas (S.G. = 0.86) – **1.07**

Full closed flow (leak by) is calculated with an atmospheric outlet pressure at a media temperature of 70°F.

Table 5. Air Flow in SCFH at Full Closed Position (5°)

Part Number	Valve Type	Port Diameter inch [mm]	Cv	Inlet Pressure (in WC) - Air							
				1	2	4	8	12	16	20	24
VKF10.032	Swing Thru	1.26 [32]	0.70	30	43	61	86	105	122	137	150
VKF10.040		1.57 [40]	0.94	40	57	81	114	141	163	182	200
VKF10.050		1.97 [50]	0.94	40	57	81	114	141	163	182	200
VKF10.065		2.56 [65]	1.76	76	107	151	215	263	305	342	375
VKF10.080		3.15 [80]	3.16	136	192	272	386	474	549	615	675
VKF10.100		3.94 [100]	4.33	186	264	373	529	650	752	843	926
VKF10.125		4.92 [125]	6.90	297	420	595	844	1036	1199	1344	1476
VKF10.150		5.91 [150]	7.25	312	442	626	887	1089	1260	1413	1551
VKF10.200		7.87 [200]	11.47	494	698	989	1402	1721	1992	2233	2452
VKF11.032	Beveled Disk	1.26 [32]	0.23	10	14	20	29	35	41	46	50
VKF11.040		1.57 [40]	0.23	10	14	20	29	35	41	46	50
VKF11.050		1.97 [50]	0.23	10	14	20	29	35	41	46	50
VKF11.065		2.56 [65]	0.35	15	21	30	43	53	61	68	75
VKF11.080		3.15 [80]	0.35	15	21	30	43	53	61	68	75
VKF11.100		3.94 [100]	0.35	15	21	30	43	53	61	68	75
VKF11.125		4.92 [125]	0.35	15	21	30	43	53	61	68	75
VKF11.150		5.91 [150]	0.47	20	29	40	57	70	81	91	100
VKF11.200		7.87 [200]	0.70	30	43	61	86	105	122	137	150

Flow Data (continued)

Flow rate (SCFH) through the valve body can be estimated using the equation below and the C_v values from Table 3 or 5.

$$Q = 1360 \times C_v \times \left(\sqrt{\frac{P_1 + P_2}{GT_f}}\right) \times \left(\sqrt{\frac{P_1 - P_2}{2}}\right)$$

…where…

C_v = Flow coefficient (see Table 3 or 5)

G = Specific gravity of gas (see Table 6)

P_1 = Absolute inlet pressure in PSIA (PSIG + 14.7)

P_2 = Absolute outlet pressure in PSIA (PSIG + 14.7)

Q = Flow rate in SCFH

T_f = Media temperature in degrees Rankine (°F + 460)

Once the flow rate is calculated in SCFH, this value can be multiplied by the Higher Heating Value (HHV) to obtain the heat input for a given flow rate.

Table 6: Gas Properties

Type of Gas	Specific Gravity (S.G.)	Higher Heating Value (HHV) - BTU/SCF
Air	1.00	-
Natural Gas	0.64	1000
Propane	1.52	2500
Butane	2.00	3200
Digester Gas*	0.84	550
FGR**	1.00	-

* The S.G. and HHV can vary widely depending on the gas source.

** The S.G. of FGR can be approximated to be 1.
Compensate for higher temperatures with equation above.

Actuator Torque

Table 7: Torque Required to Operate VKF1x Valves at Various Differential Pressures (in-lb)

Part Number	Valve Size	Pressure Drop Across Valve (PSI)					
		0.5	**1**	**5**	**10**	**15**	**20**
VKF1x.032	1-1/4”	3	3	5	6	8	9
VKF1x.040	1-1/2”	3	3	5	6	8	9
VKF1x.050	2”	3	3	5	6	8	9
VKF1x.065	2-1/2”	3	4	6	8	11	13
VKF1x.080	3”	3	4	7	10	14	17
VKF1x.100	4”	3	4	11	19	30	36
VKF1x.125	5”	3	5	15	27	40	-
VKF1x.150	6”	5	7	22	41	60	-
VKF1x.200	8”	5	9	39	76	114	-

Dimensions

Dimensions in inches [mm]

VKF1x.032 – 1-1/4" valve

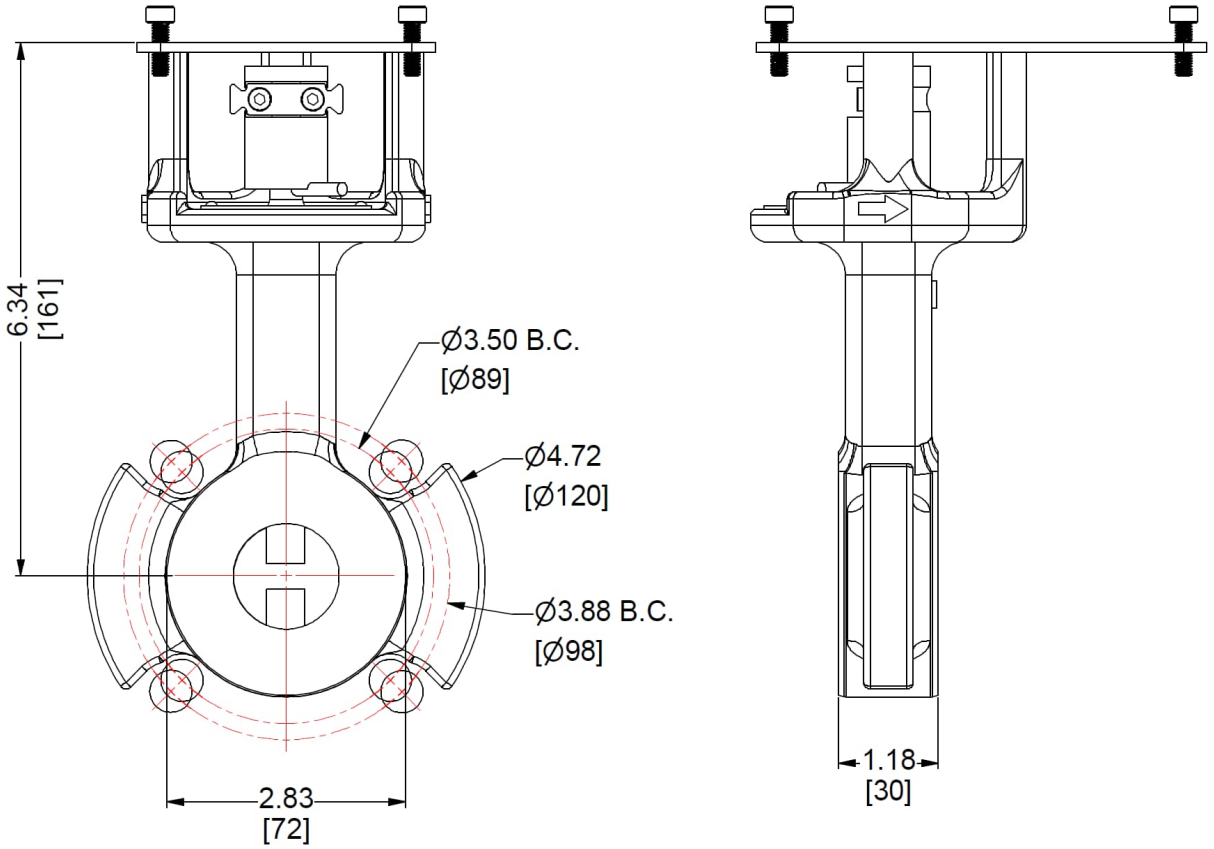

Weight: 5.1 lb [2.3 kg]

Table 8: Recommended Bolts for Mounting VKF1x.032 Valves between Flanges

Flange Size	Application	Nominal Diameter	Length[1]	Quantity
1-1/4"	Full port	1/2"	3-1/2"	4
1-1/2"	Reduced port	1/2"	3-3/4"	4

[1] Bolt lengths are calculated assuming the VKF1x valve is being mounted between two 125#/150# ANSI flanges, with two 1/16" thick gaskets, two SAE washers, and one standard hex nut

Dimensions (continued)

Dimensions in inches [mm]

VKF1x.040 – 1-1/2” valve

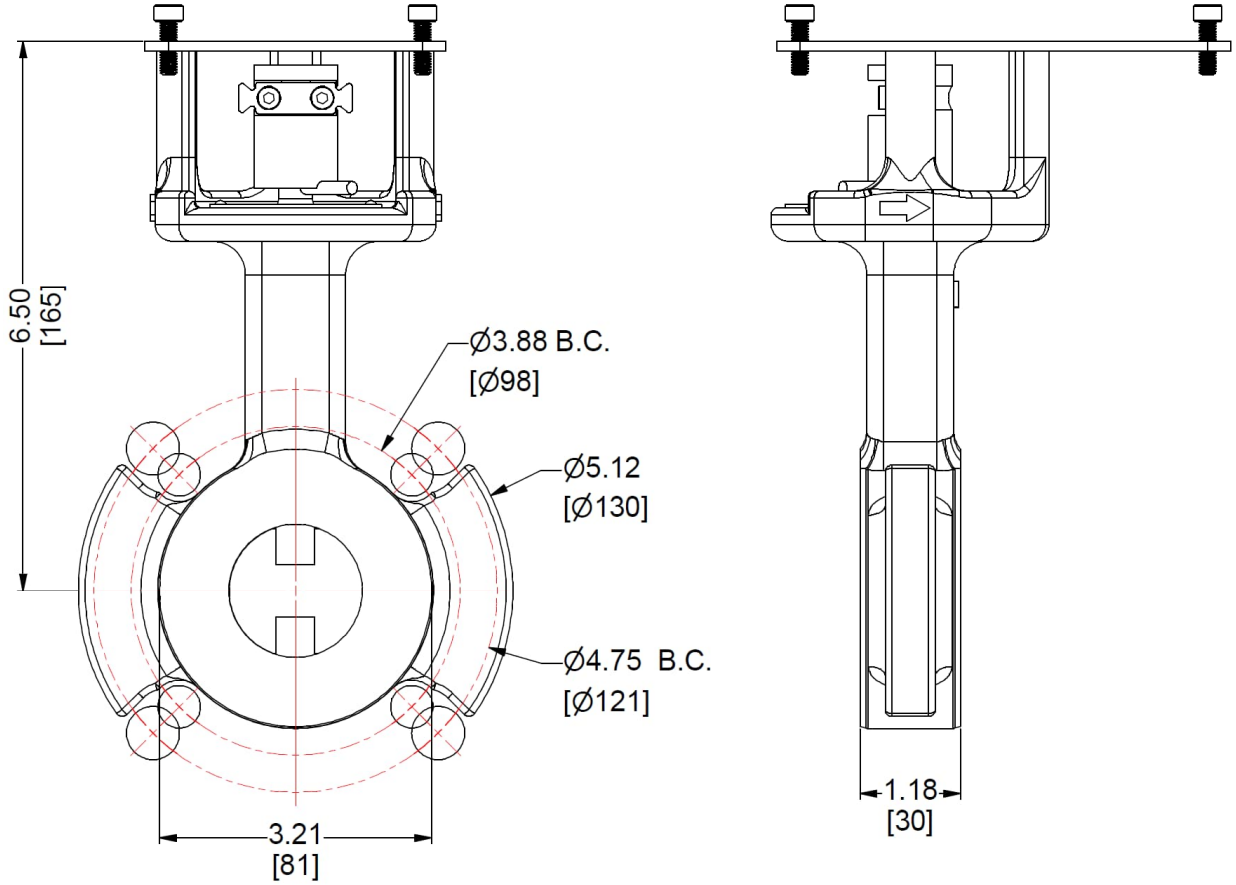

Weight: 5.5 lb [2.5 kg]

Table 9: Recommended Bolts for Mounting VKF1x.040 Valves between Flanges

Flange Size	Application	Nominal Diameter	Length[1]	Quantity
1-1/2”	Full port	1/2”	3-3/4”	4
2”	Reduced port	5/8”	4”	4

[1] Bolt lengths are calculated assuming the VKF1x valve is being mounted between two 125#/150# ANSI flanges, with two 1/16” thick gaskets, two SAE washers, and one standard hex nut

Dimensions (continued)

Dimensions in inches [mm]

VKF1x.050 – 2” valve

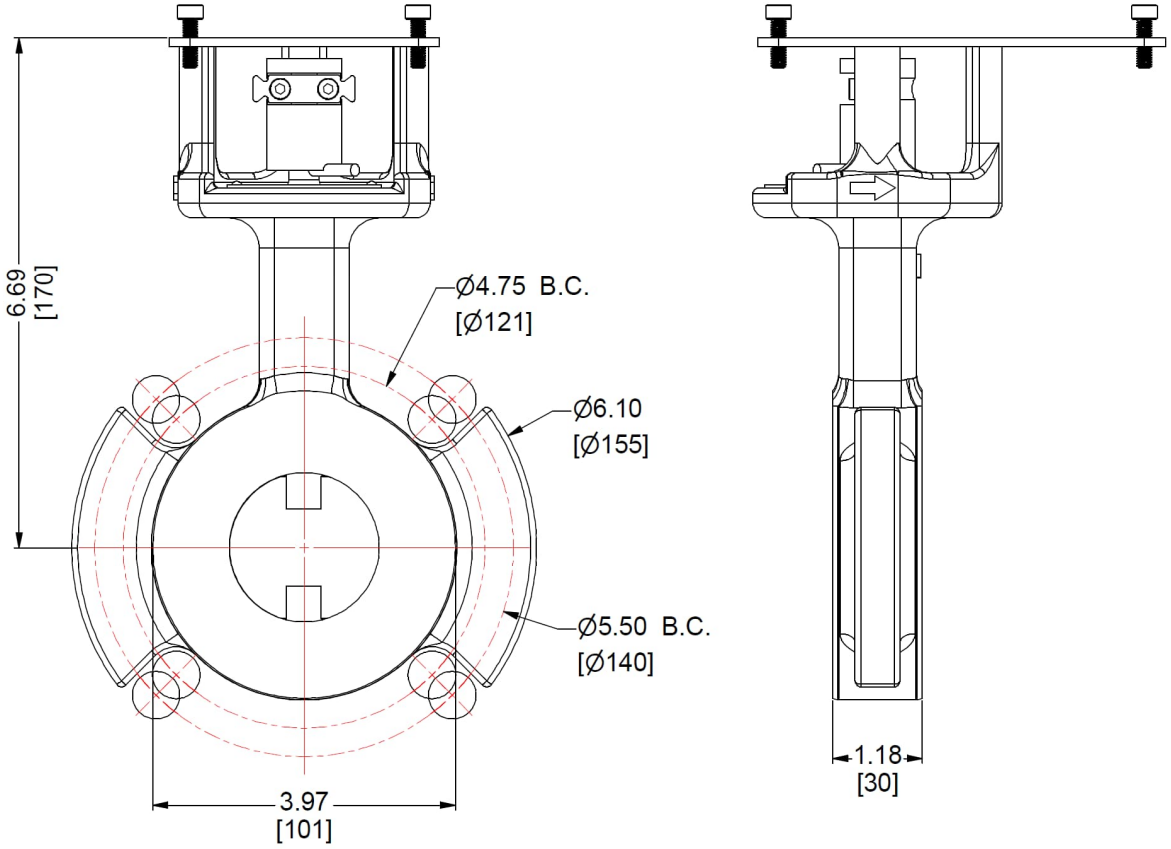

Weight: 6.4 lb [2.9 kg]

Table 10: Recommended Bolts for Mounting VKF1x.050 Valves between Flanges

Flange Size	Application	Nominal Diameter	Length[1]	Quantity
2”	Full port	5/8”	4”	4
2-1/2”	Reduced port	5/8”	4-1/4”	4

[1] Bolt lengths are calculated assuming the VKF1x valve is being mounted between two 125#/150# ANSI flanges, with two 1/16” thick gaskets, two SAE washers, and one standard hex nut

Dimensions (continued)

Dimensions in inches [mm]

VKF1x.065 – 2-1/2" valve

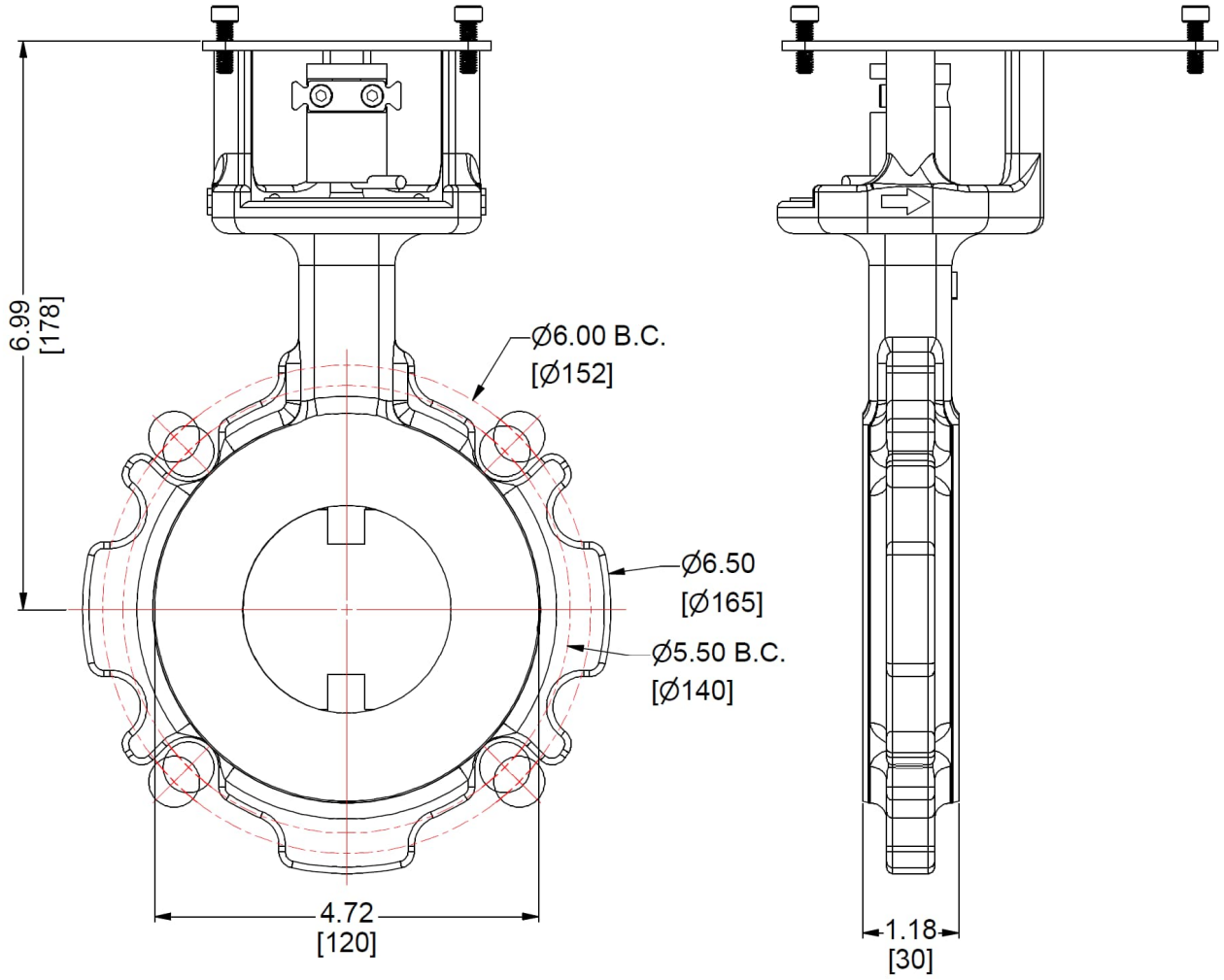

Weight: 7.5 lb [3.4 kg]

Table 11: Recommended Bolts for Mounting VKF1x.065 Valves between Flanges

Flange Size	Application	Nominal Diameter	Length[1]	Quantity
2-1/2"	Full port	5/8"	4-1/4"	4
3"	Reduced port	5/8"	4-1/4"	4

[1] Bolt lengths are calculated assuming the VKF1x valve is being mounted between two 125#/150# ANSI flanges, with two 1/16" thick gaskets, two SAE washers, and one standard hex nut

Dimensions (continued)

Dimensions in inches [mm]

VKF1x.080 – 3” valve

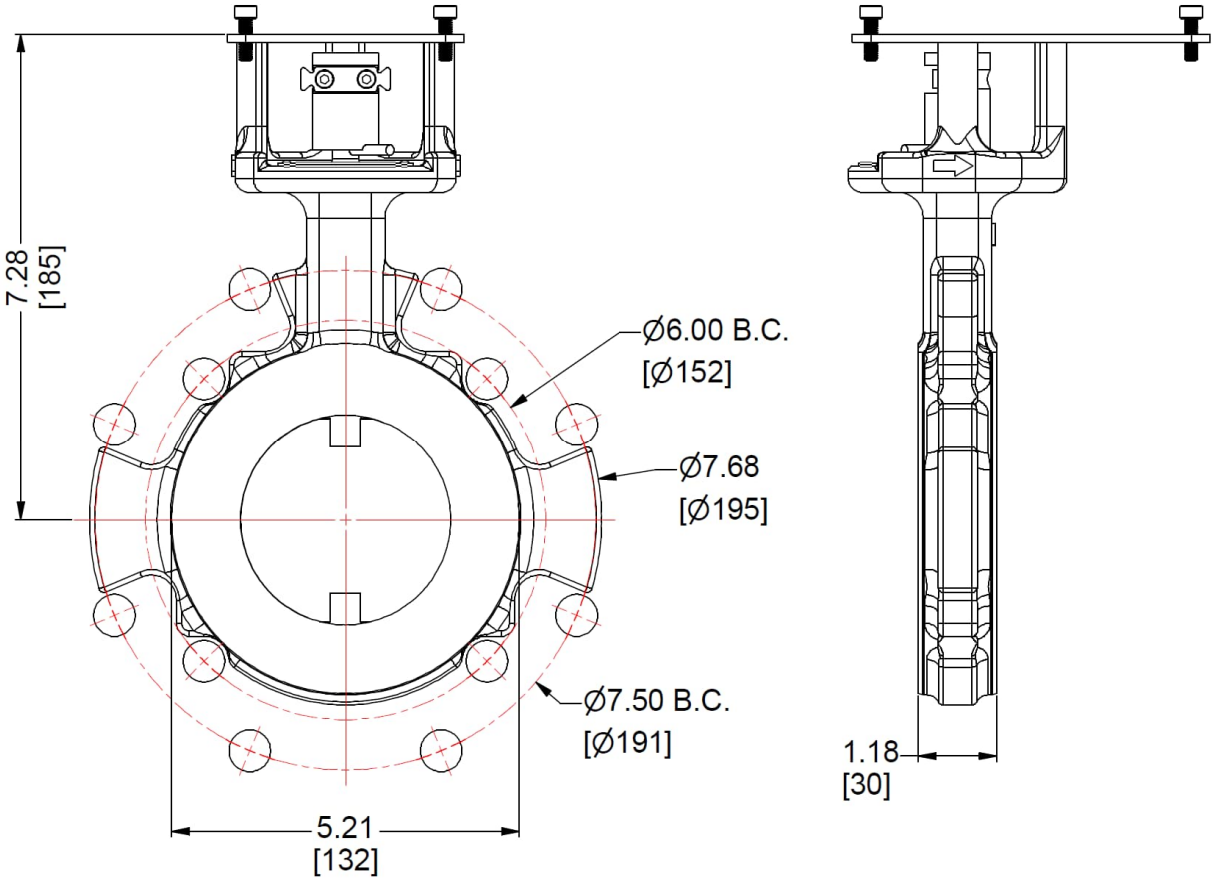

Weight: 7.9 lb [3.6 kg]

Table 12: Recommended Bolts for Mounting VKF1x.080 Valves between Flanges

Flange Size	Application	Nominal Diameter	Length[1]	Quantity
3”	Full port	5/8”	4-1/4”	4
4”	Reduced port	5/8”	4-1/4”	8

[1] Bolt lengths are calculated assuming the VKF1x valve is being mounted between two 125#/150# ANSI flanges, with two 1/16” thick gaskets, two SAE washers, and one standard hex nut

Dimensions (continued)

Dimensions in inches [mm]

VKF1x.100 – 4” valve

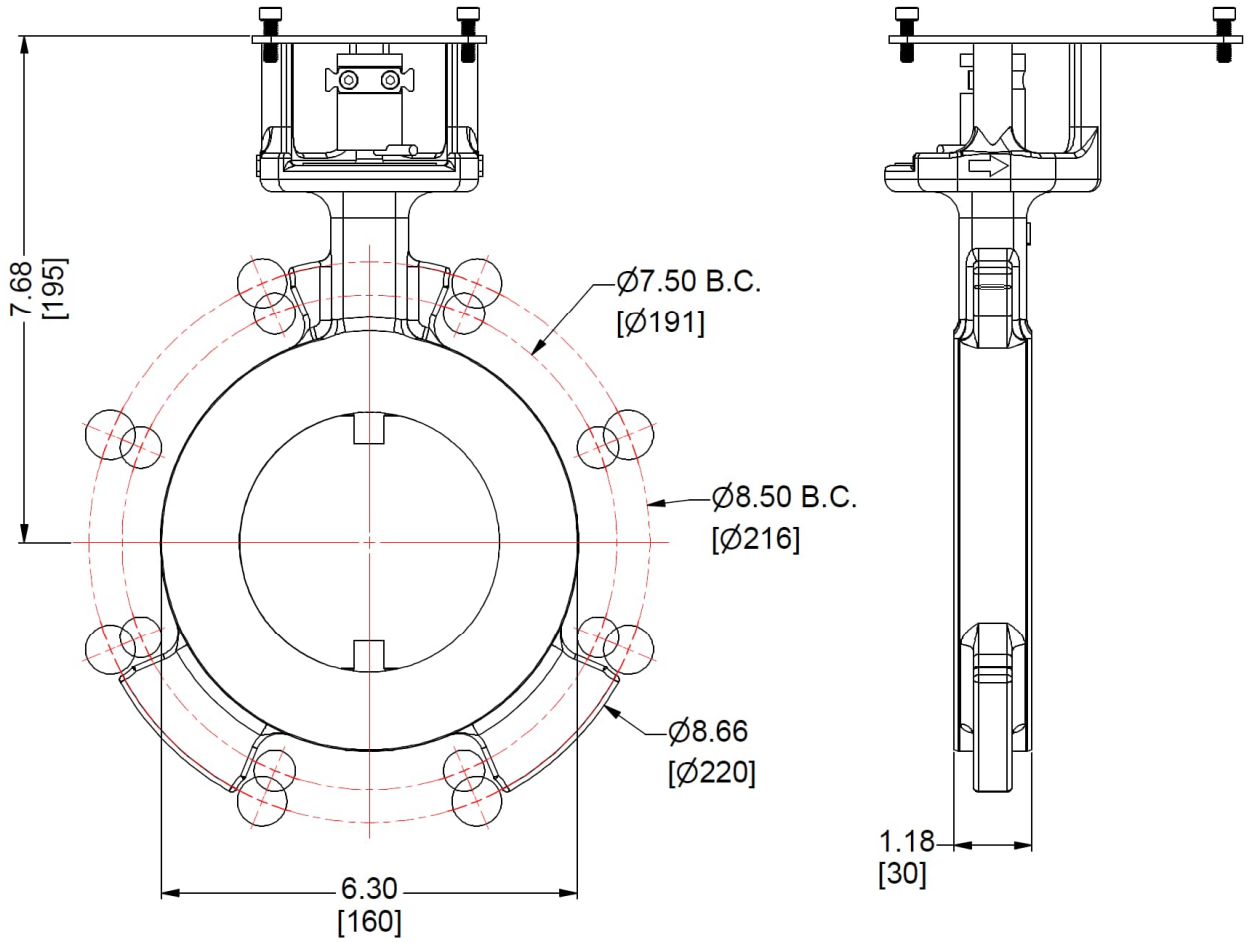

Weight: 9.5 lb [4.3 kg]

Table 13: Recommended Bolts for Mounting VKF1x.100 Valves between Flanges

Flange Size	Application	Nominal Diameter	Length[1]	Quantity
4”	Full port	5/8”	4-1/4”	8
5”	Reduced port	3/4”	4-1/2”	8

[1] Bolt lengths are calculated assuming the VKF1x valve is being mounted between two 125#/150# ANSI flanges, with two 1/16” thick gaskets, two SAE washers, and one standard hex nut

Dimensions (continued)

Dimensions in inches [mm]

VKF1x.125 – 5” valve

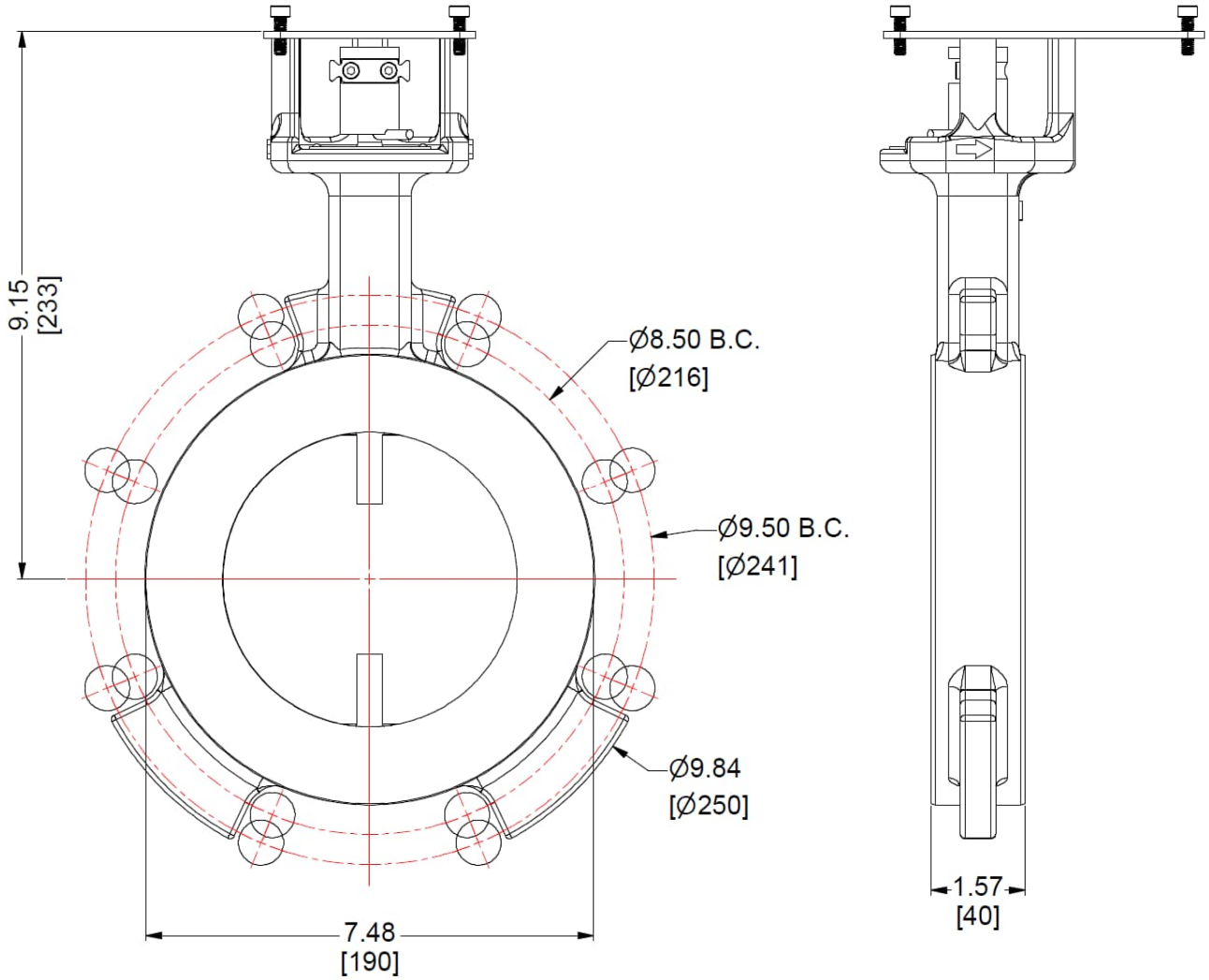

Weight: 16.7 lb [7.6 kg]

Table 14: Recommended Bolts for Mounting VKF1x.125 Valves between Flanges

Flange Size	Application	Nominal Diameter	Length[1]	Quantity
5”	Full port	3/4”	5”	8
6”	Reduced port	3/4”	5”	8

[1] Bolt lengths are calculated assuming the VKF1x valve is being mounted between two 125#/150# ANSI flanges, with two 1/16” thick gaskets, two SAE washers, and one standard hex nut

Dimensions (continued)

Dimensions in inches [mm]

VKF1x.150 – 6” valve

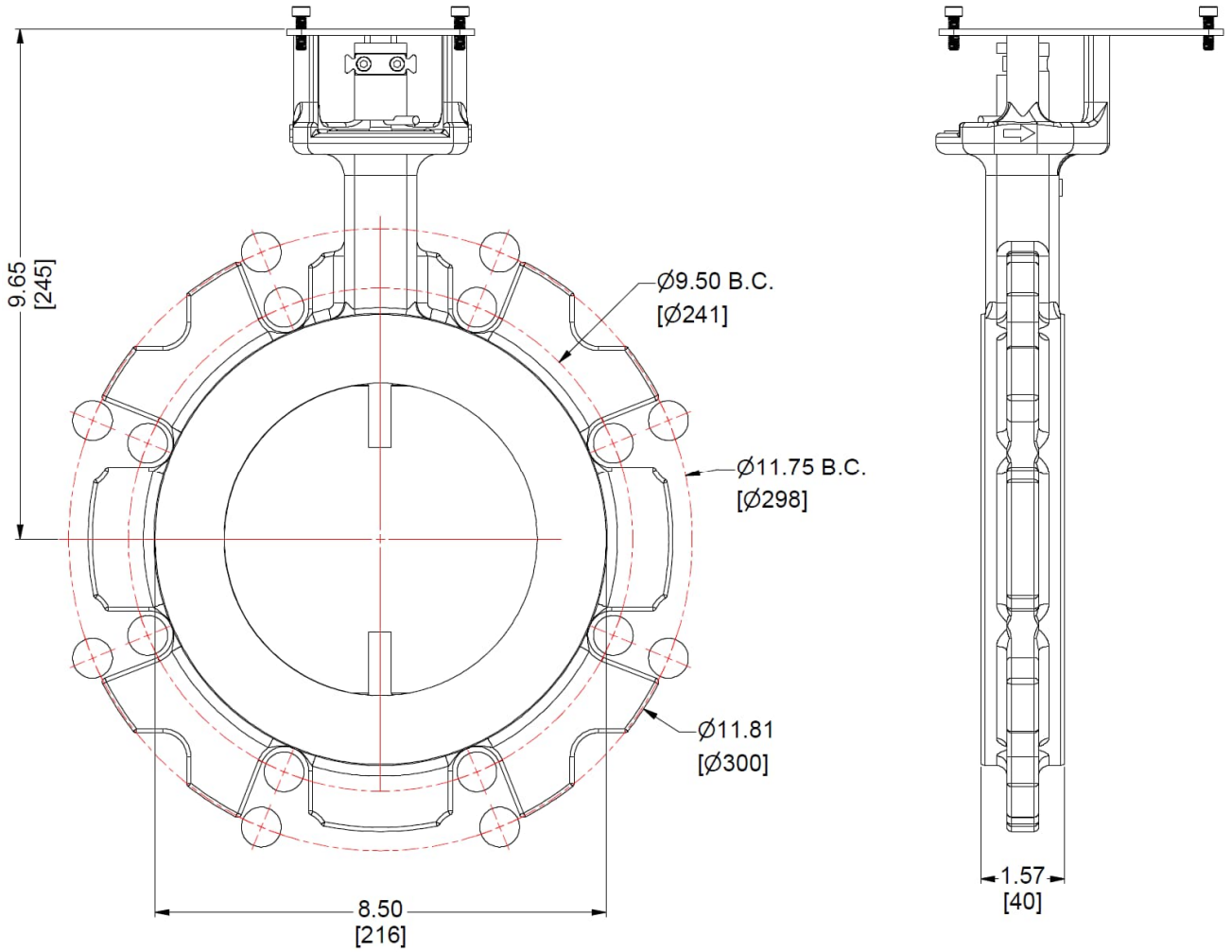

Weight: 21.1 lb [9.6 kg]

Table 15: Recommended Bolts for Mounting VKF1x.150 Valves between Flanges

Flange Size	Application	Nominal Diameter	Length[1]	Quantity
6”	Full port	3/4”	5”	8
8”	Reduced port[2]	3/4”	5-1/4”	8

[1] Bolt lengths are calculated assuming the VKF1x valve is being mounted between two 125#/150# ANSI flanges, with two 1/16” thick gaskets, two SAE washers, and one standard hex nut

[2] When using a 6” VKF1x.150 valve as a reduced port valve, 8” butt-weld flanges and 6” full-face gaskets with bolt holes must be used. See “Mounting flange notes” on page 2 for a more detailed explanation.

Dimensions (continued)

Dimensions in inches [mm]

VKF1x.200 – 8” valve

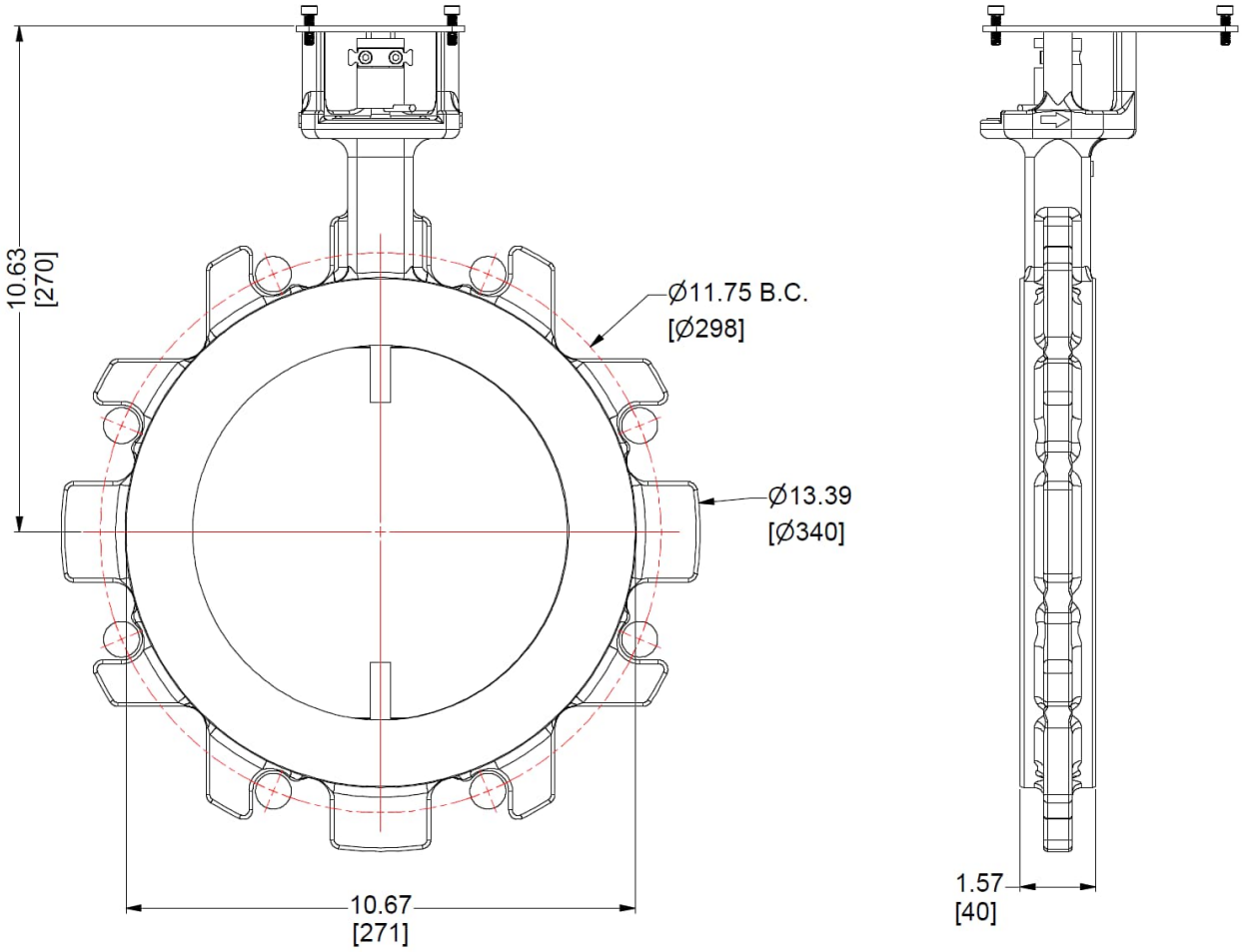

Weight: 28.2 lb [12.8 kg]

Table 16: Recommended Bolts for Mounting VKF1x.200 Valves between Flanges

Flange Size	Application	Nominal Diameter	Length[1]	Quantity
8”	Full port	3/4”	5-1/4”	8

[1] Bolt lengths are calculated assuming the VKF1x valve is being mounted between two 125#/150# ANSI flanges, with two 1/16” thick gaskets, two SAE washers, and one standard hex nut

Dimensions (continued)

Dimensions in inches [mm]

VKF1x.xxx-MH – Manual kit

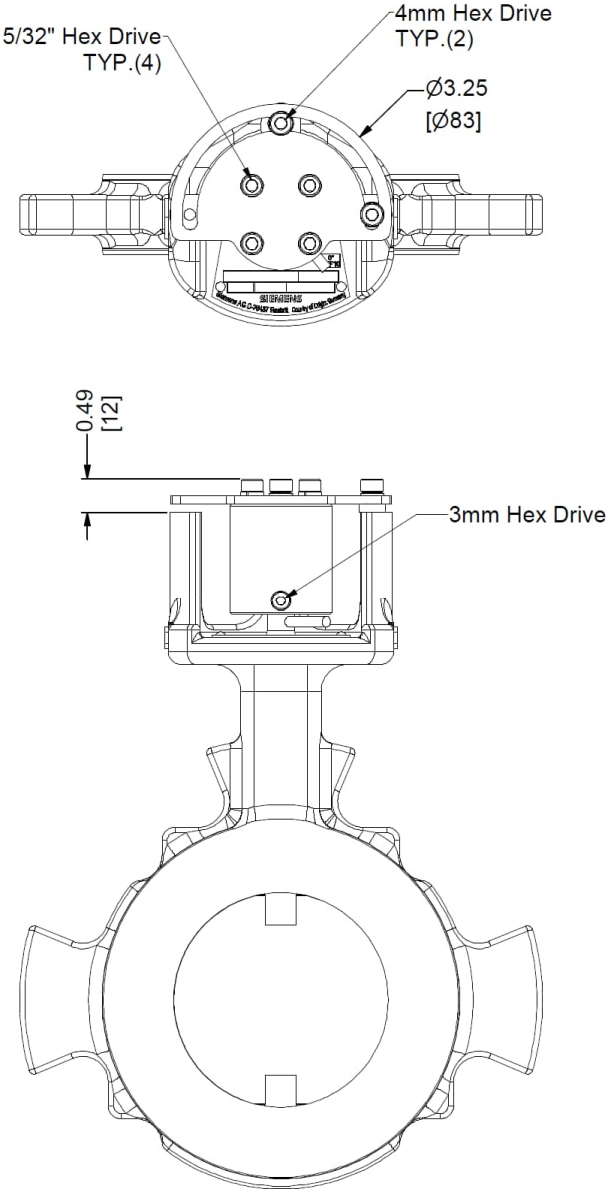

Dimensions (continued)

Dimensions in inches [mm]

CA-VKF1X-x – Crank arm kit

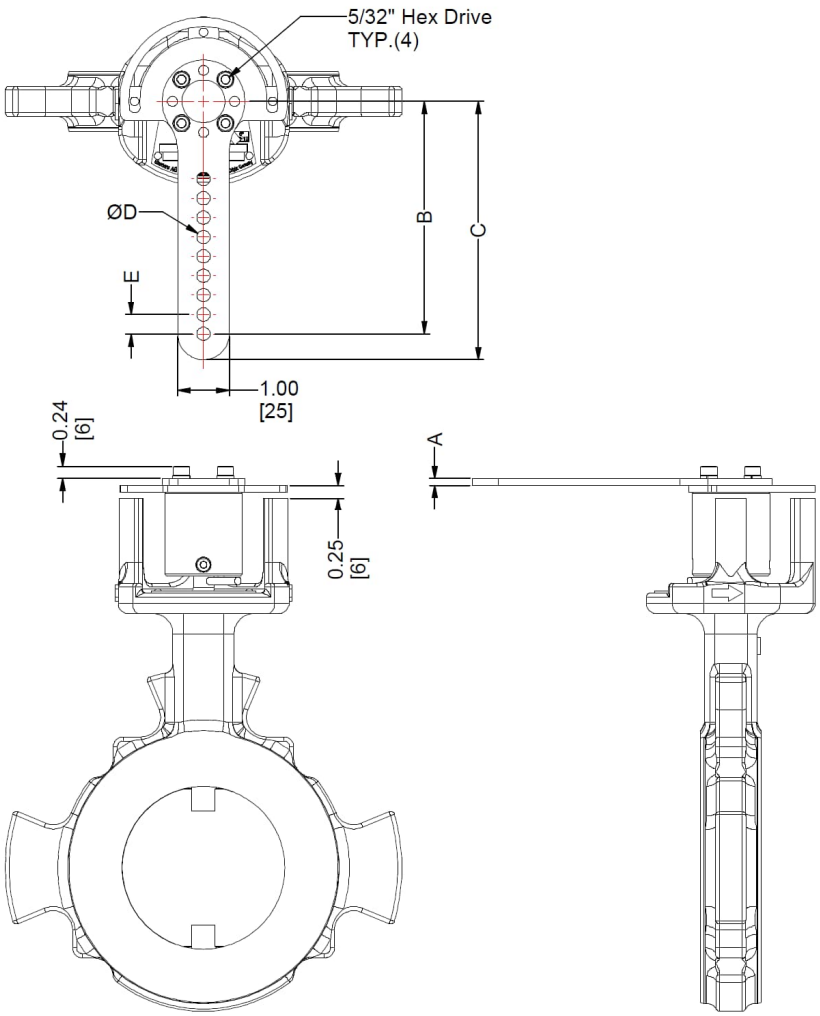

Table 17: CA-VKF1X-x – Crank Arm Kit Dimensions

Part Number	A	B	C	D	E
CA-VKF1X-1	0.38 [10]	4.80 [122]	5.25 [133]	0.39 [10] x6	0.58 [15]
CA-VKF1X-2	0.14 [3]	4.50 [114]	5.00 [127]	0.26 [7] x9	0.38 [10]
CA-VKF1X-3	0.14 [3]	4.50 [114]	5.00 [127]	0.26 [7] slot	3.00 [76] slot

Mounting instructions

Mounting position of the mounting plate

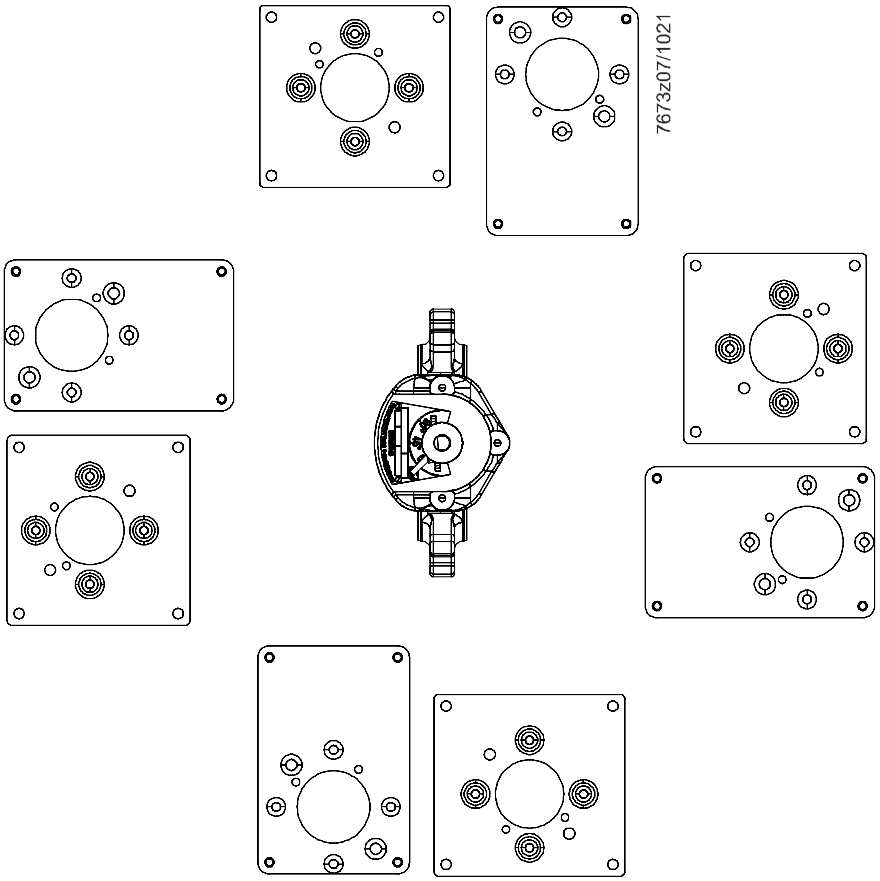

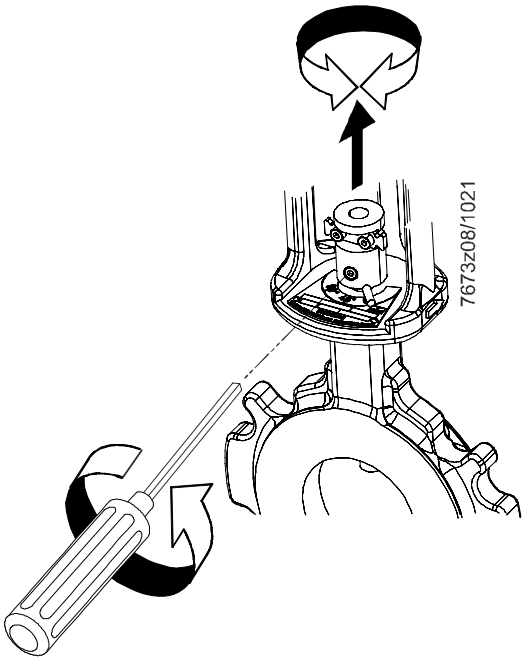

Loosen the screw. Align the coupling to suit the mounting position of the mounting plate. Tighten the screw again (max. 18 in-lb).

Mounting instructions (continued)

1.a

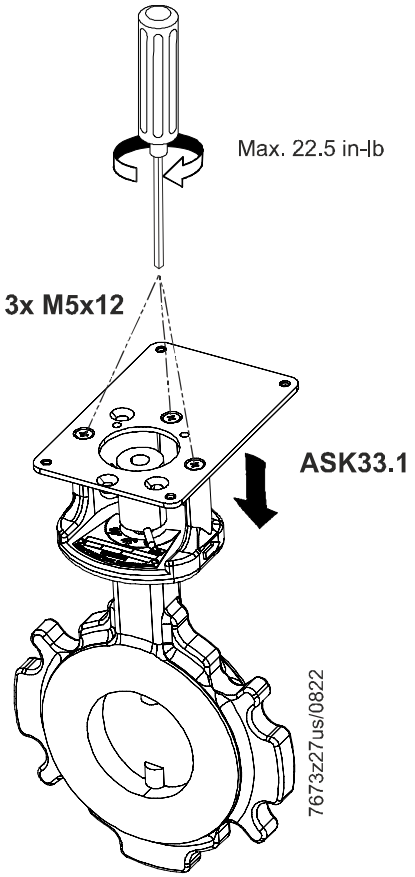

1.b

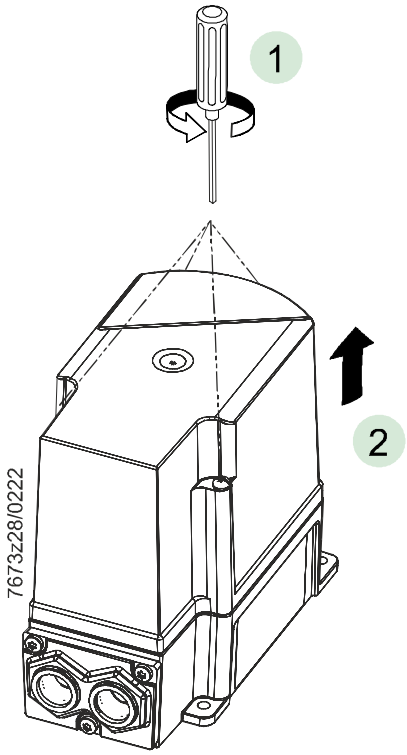

1.c

Release the coupling while pressing the pressure pin down.

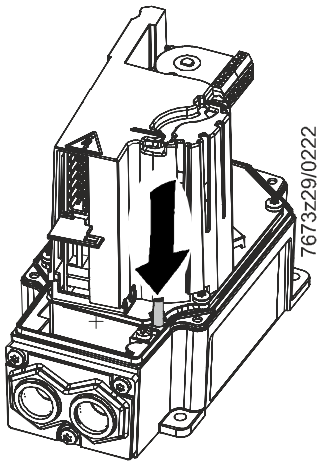

1.d

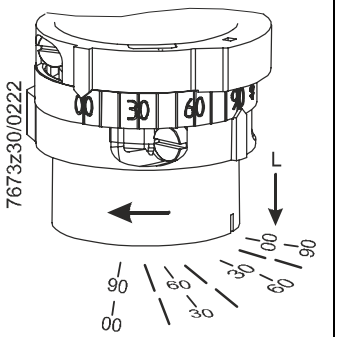

Zero position

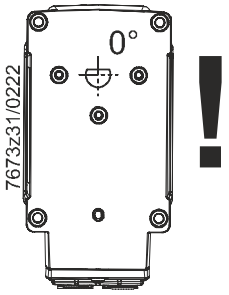

Mounting instructions (continued)

1.e

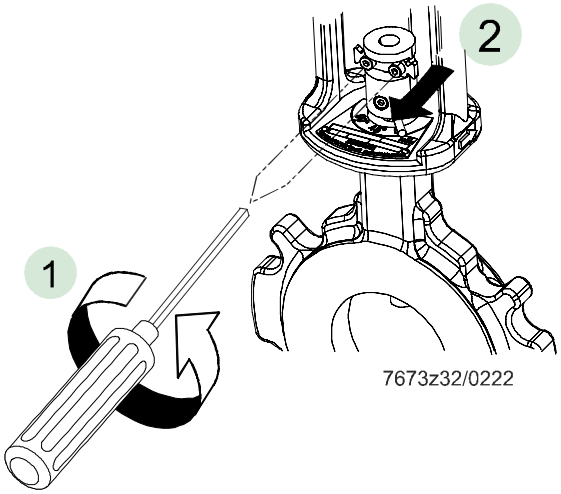

1 Loosen the screws.

2 Pull the plate in the direction of the arrow and mount the actuator.

1.g

Lock the coupling while loosening the pressure pin.

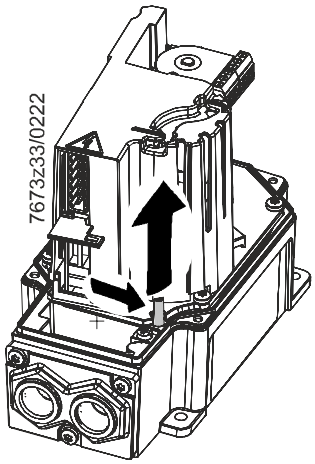

1.f

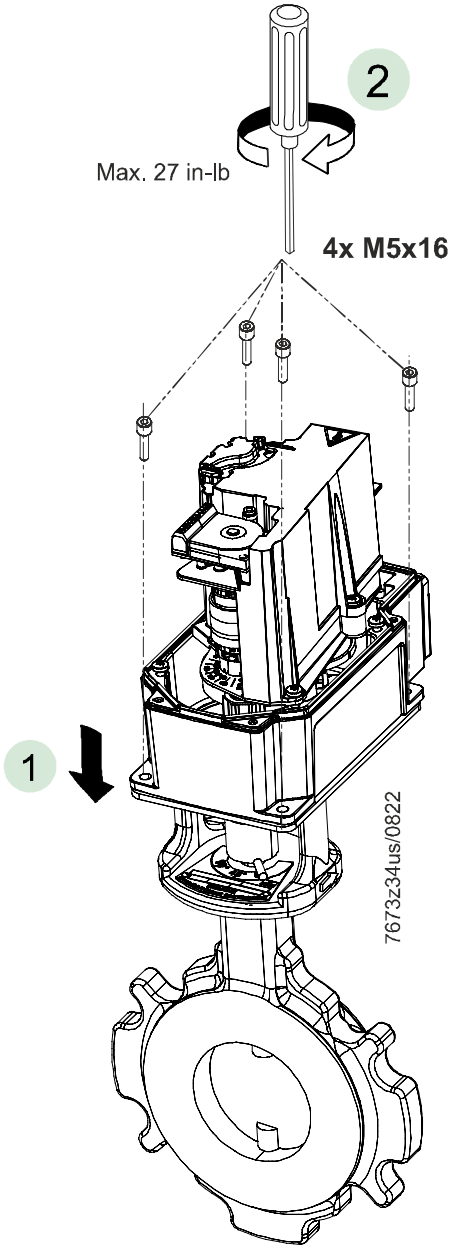

Mounting instructions (continued)

1.h

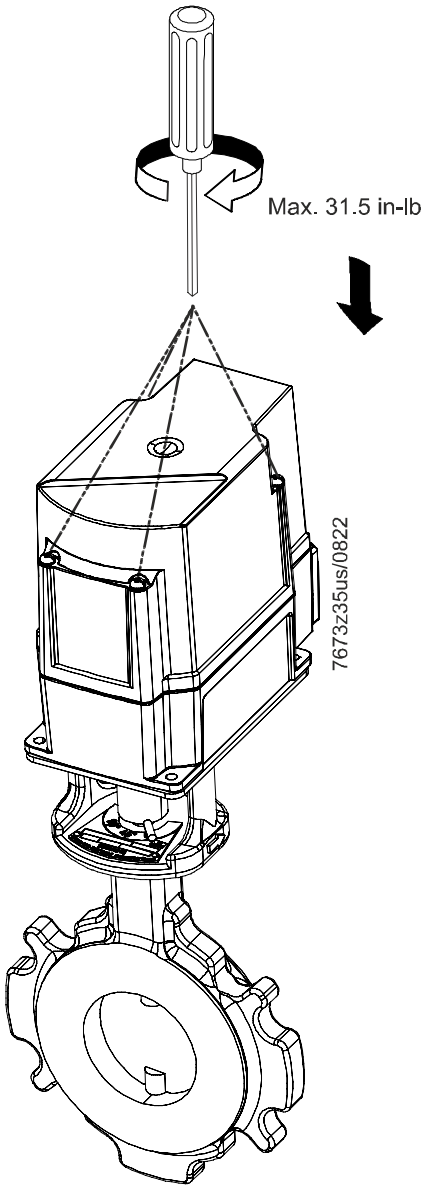

1.i

Tighten the screws (max. 18 in-lb).

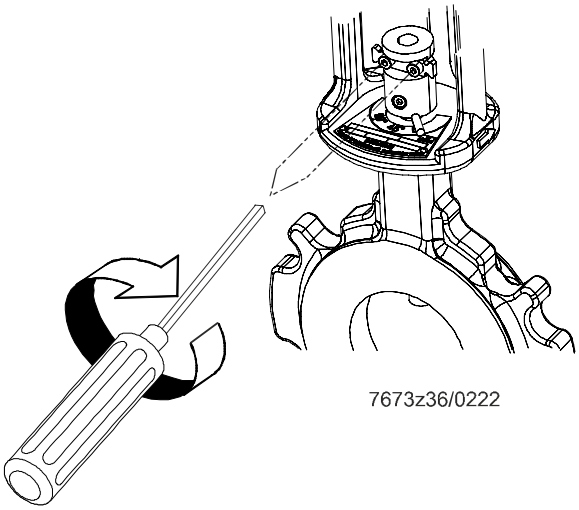

Mounting instructions (continued)

2.a

→ ASK33.3 (for SQM5)

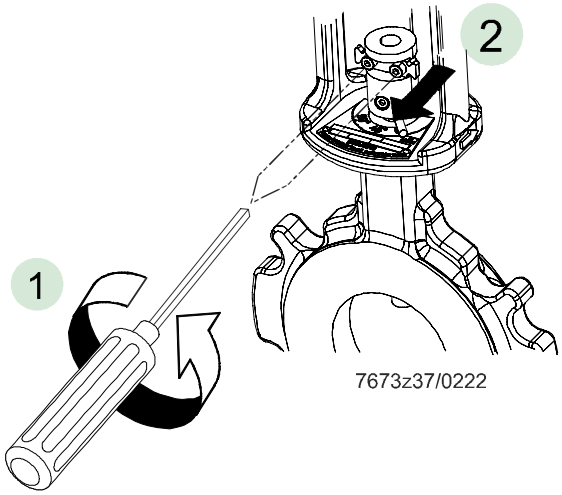

1 Loosen the screws.

2 Pull the plate in the direction of the arrow and mount the actuator.

2.b

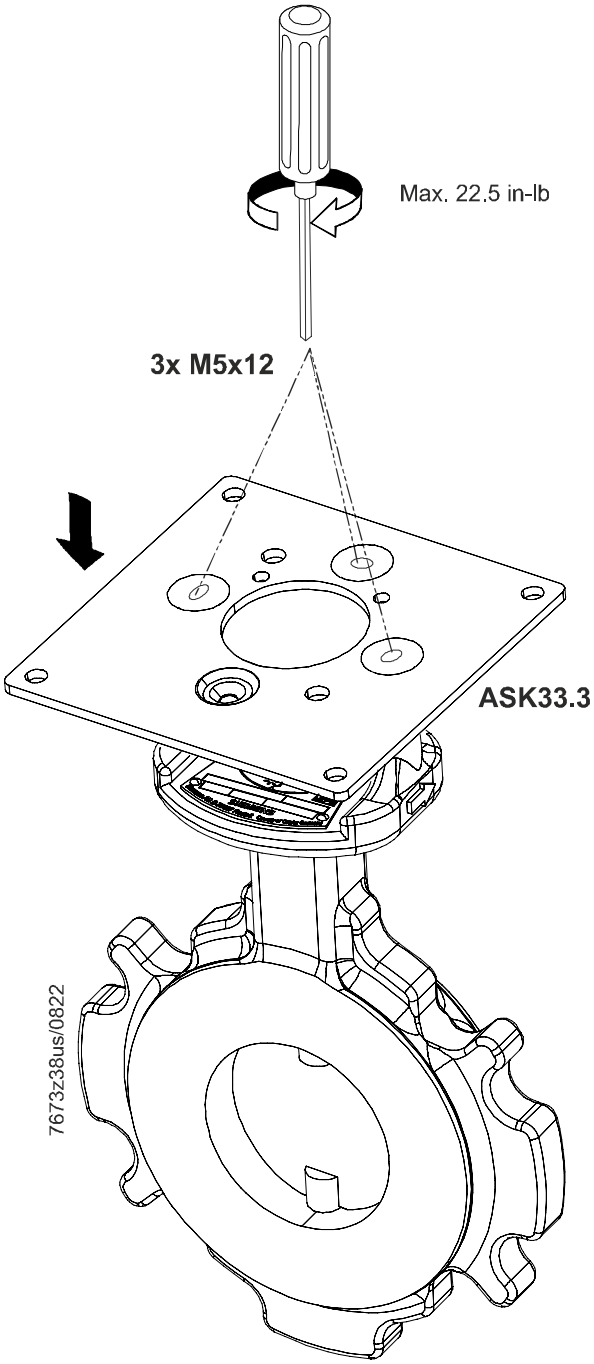

Mounting instructions (continued)

2.c

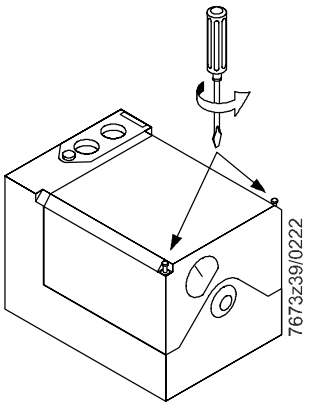

2.d

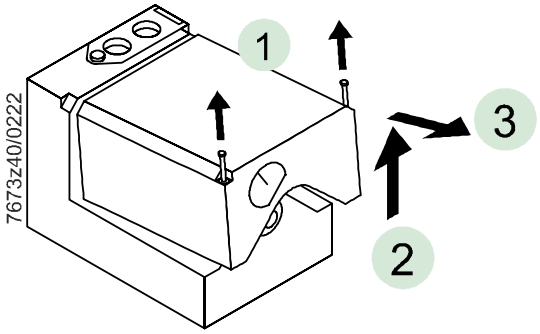

2.e

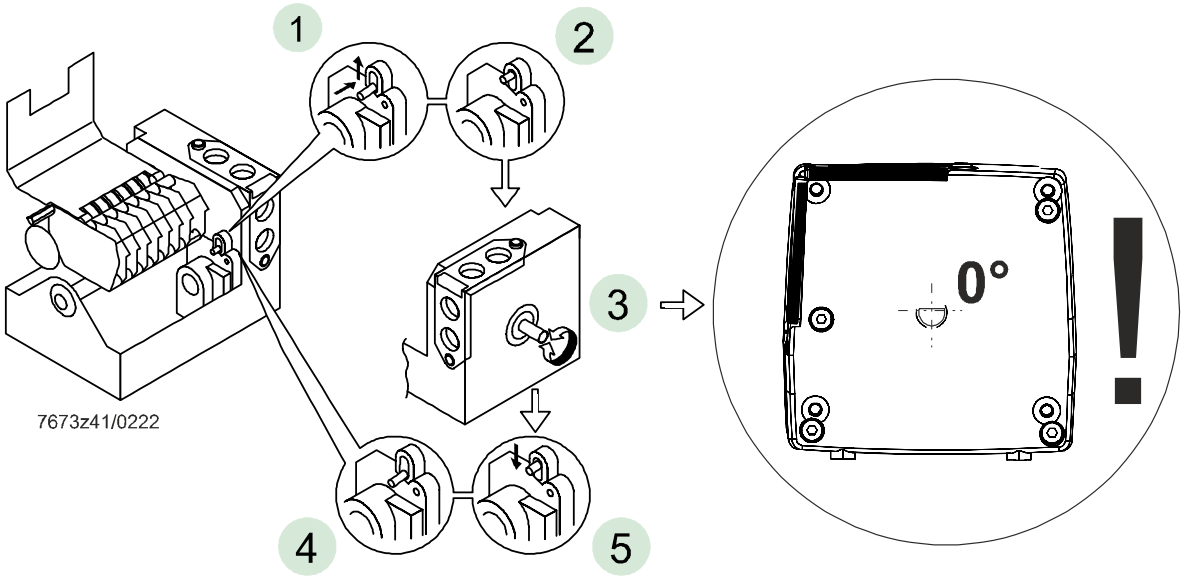

2.f

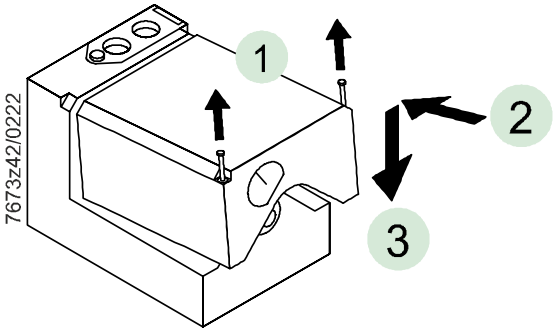

2.g

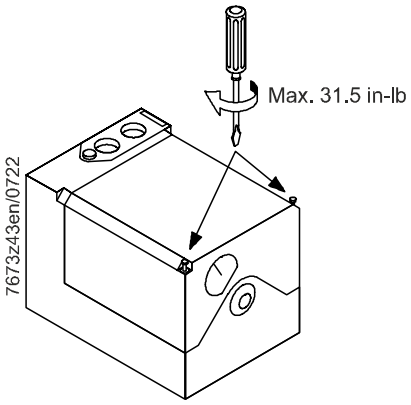

Mounting instructions (continued)

2.h

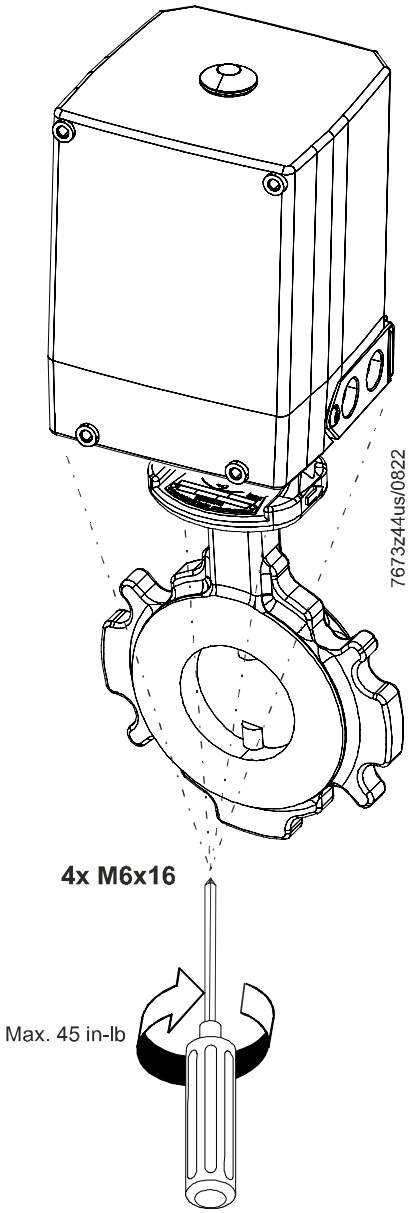

2.i

Tighten the screws (max. 18 in-lb).

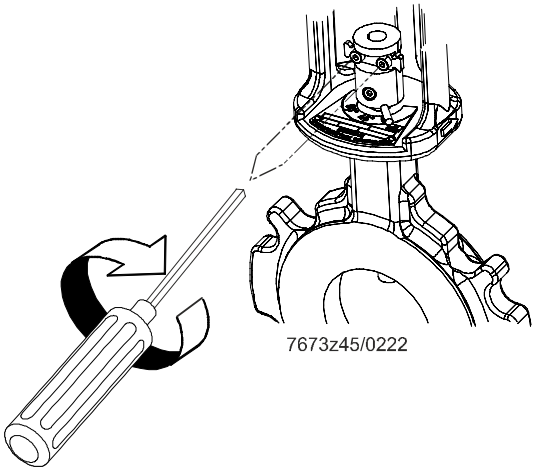

Siemens AG Smart Infrastructure
Berliner Ring 23
76437 Rastatt
GERMANY

Your feedback is important to us. If you have comments about this document, please send them to techsupport@SCCcombustion.com

Document No. CC1N7673us
Country of Origin: DE